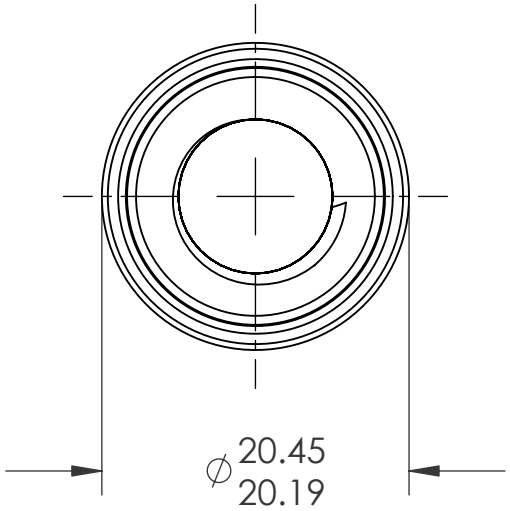

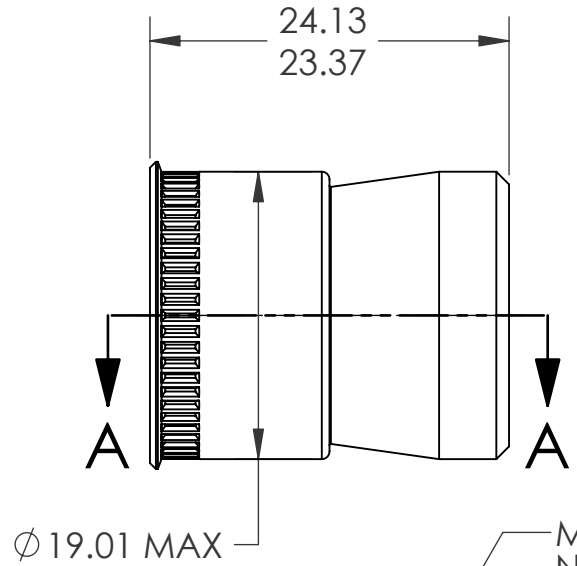

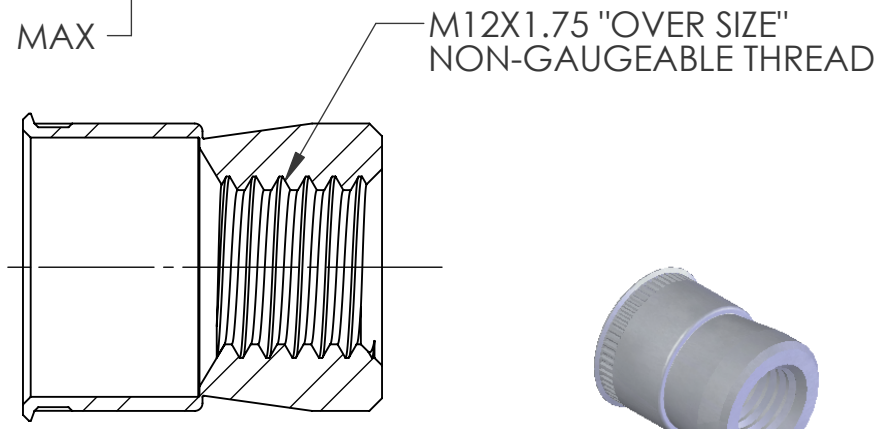

SECTION A-A

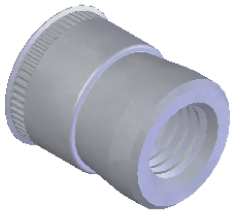

NOTE:
1. GRIP RANGE: 0.76 MIN.
2. HOLE SIZE:
   1. 0.76 - 2.29 MT'L THICK.: 19.05 AFTER ALL APPLIED FINISHES.
   2. 2.31 - 3.15 MT'L THICK.: 19.44 AFTER ALL APPLIED FINISHES.
   3. 3.17 - 4.72 MT'L THICK.: 19.83 AFTER ALL APPLIED FINISHES.
   4. 4.72 - OVER MT'L THICK.: 20.24 AFTER ALL APPLIED FINISHES.
3. INSTALLED LENGTH: N/A
4. LUBRICATION: NONE
5. INSTALLATION TOOL: SSG 808 SPIN SPIN

PROPRIETARY AND CONFIDENTIAL

THIS DRAWING, AND THE INFORMATION CONTAINED HERIN, ARE THE PROPERTY OF SHEREX AND ARE NOT TO BE USED IN ANY MANNER DETRIMENT TO THE INTEREST OF THE COMPANY.

SHEREX SOLUTIONS RESERVES THE RIGHT TO REVISE PART/DRAWING WITHOUT NOTICE.

NEXT ASSY	USED ON
APPLICATION	

UNLESS OTHERWISE SPECIFIED:

DIMENSIONS ARE IN MILIMETERS
TOLERANCES:
ANGULAR: MACH ± 1 BEND ±1
ONE PLACE DECIMAL ±0.10
TWO PLACE DECIMAL ±0.05

INTERPRET GEOMETRIC TOLERANCING PER: ASME Y14.5M-1994

MATERIAL
12L14

FINISH
CADMIUM PER QQ-P-416 TYPE I CLASS 3

DO NOT SCALE DRAWING

	NAME	DATE
DRAWN	JLA	8/11/03
CHECKED		
ENG APPR.	JLA	8/11/03
MFG APPR.	AJP	8/11/03
Q.A.		

COMMENTS:
E-mail: info@sherex.com
www.sherex.com
Phone: 866-474-3739
Fax: 716-875-0358

TITLE:
SMALL FLANGE SWAGING

SIZE	DWG. NO.	REV
A	CAT2-12175	A

SCALE: 2:1 | WEIGHT:.0203 kg | SHEET 1 OF 1

5 4 3 2 1