REVISIONS			
REV.	DESCRIPTION	DATE	ECN
A	INITIAL RELEASE	5/18/09	1184

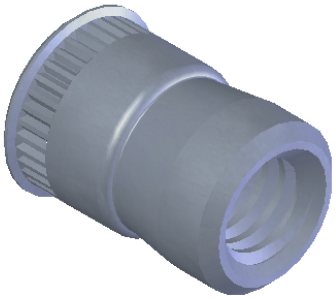

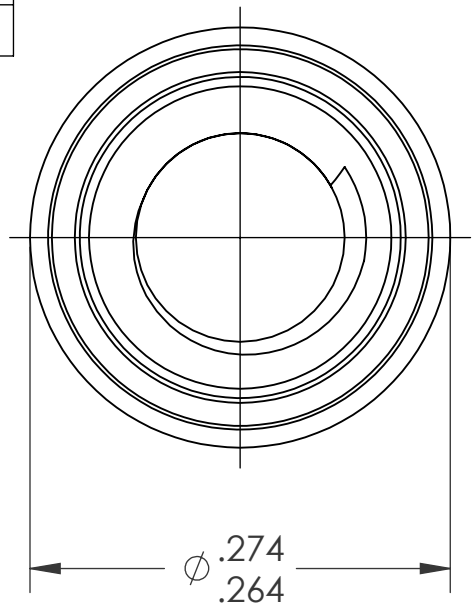

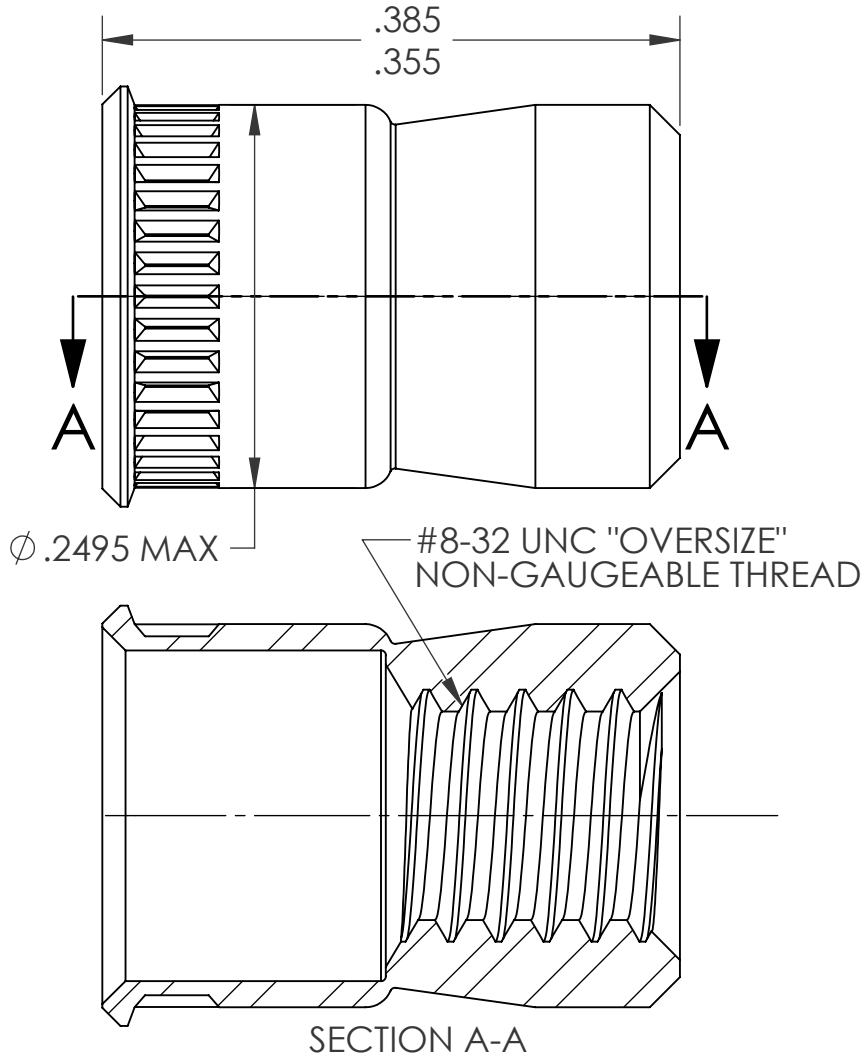

NOTE:
1. GRIP RANGE: .030 MIN.
2. HOLE SIZE:
   1. .030 - .090 MT'L THICK.: .2500 AFTER ALL APPLIED FINISHES.
   2. .091 - .124 MT'L THICK.: .2570 AFTER ALL APPLIED FINISHES.
   3. .125 - .186 MT'L THICK.: .2656 AFTER ALL APPLIED FINISHES.
   4. .187 - OVER MT'L THICK.: .2656 AFTER ALL APPLIED FINISHES.
3. INSTALLED LENGTH: N/A
4. LUBRICATION: NONE
5. INSTALLATION TOOL: SSG 801 SPIN SPIN

PROPRIETARY AND CONFIDENTIAL

THIS DRAWING, AND THE INFORMATION CONTAINED HERIN, ARE THE PROPERTY OF SHEREX AND ARE NOT TO BE USED IN ANY MANNER DETRIMENT TO THE INTEREST OF THE COMPANY.

SHEREX SOLUTIONS RESERVES THE RIGHT TO REVISE PART/DRAWING WITHOUT NOTICE.

NEXT ASSY	USED ON
APPLICATION	

UNLESS OTHERWISE SPECIFIED:

DIMENSIONS ARE IN INCHES
TOLERANCES:
ANGULAR: MACH ± 1 BEND ±1
TWO PLACE DECIMAL ±.01
THREE PLACE DECIMAL ±.002

INTERPRET GEOMETRIC TOLERANCING PER:
ASME Y14.5M-1994

MATERIAL
304L STAINLESS

FINISH
TIN ALLOY PER ASTM B545

DO NOT SCALE DRAWING

	NAME	DATE
DRAWN	TWR	5/18/09
CHECKED		
ENG APPR.	JVK	5/18/09
MFG APPR.		
Q.A.	JVK	5/18/09

COMMENTS:

E-mail: info@sherex.com
www.sherex.com
Phone: 866-474-3739
Fax: 716-875-0358

TITLE:
SMALL FLANGE SWAGING

SIZE	DWG. NO.	REV
A	CFT1-0832	A

SCALE: 2:1 WEIGHT: kg SHEET 1 OF 1

5 4 3 2 1