REVISIONS			
REV.	DESCRIPTION	DATE	ECN
A	INITIAL RELEASE	12/5/17	2857

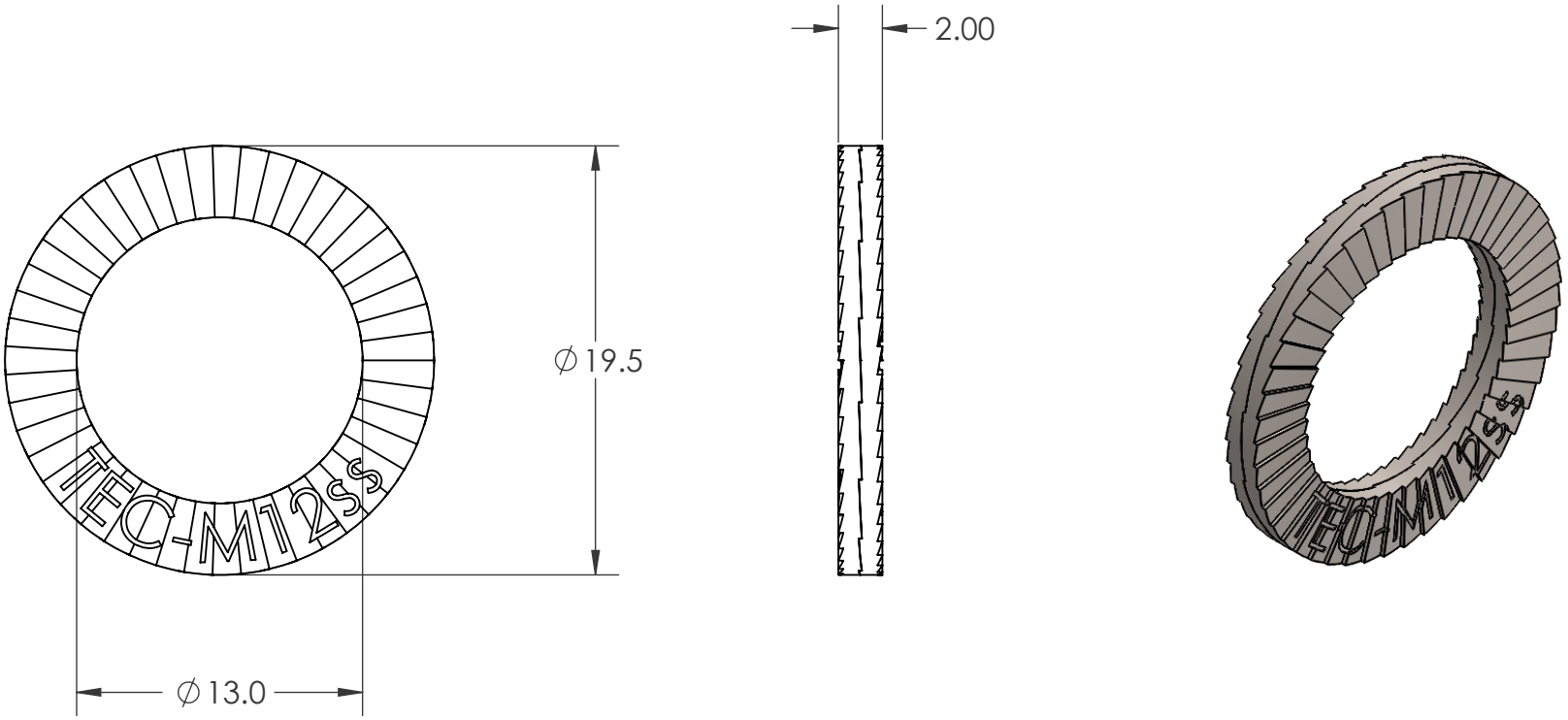

PROPRIETARY AND CONFIDENTIAL

THIS DRAWING, AND THE INFORMATION CONTAINED HERIN, ARE THE PROPERTY OF SHEREX AND ARE NOT TO BE USED IN ANY MANNER DETRIMENT TO THE INTEREST OF THE COMPANY.

SHEREX FASTENING SOLUTIONS RESERVES THE RIGHT TO REVISE PART/DRAWING WITHOUT NOTICE.

DRAWING NO.: TEC-M12ss

UNLESS OTHERWISE SPECIFIED:

DIMENSIONS ARE IN MILLIMETERS
TOLERANCES:
ANGULAR: MACH ± 1 BEND ± 1
I.D. TOLERANCE: ±0.2
O.D. TOLERANCE: ±0.2
THICKNESS TOLERANCE: ±0.25

INTERPRET GEOMETRIC TOLERANCING PER: ASME Y14.5M-1994

MATERIAL
316L STAINLESS STEEL; KOLSTERIZE CASE HARDEN (K22 PROCESS)

FINISH
NONE

DO NOT SCALE DRAWING

	NAME	DATE
DRAWN	MTB	12/5/17
CHECKED		
ENG APPR.	JVK	12/5/17
MFG APPR.		
Q.A.		

COMMENTS:
E-mail: info@disc-lock.com
www.disc-lock.com
Phone: 866-474-3739
Fax: 716-875-0358

TECSERIES
A SHEREX FASTENING SOLUTIONS® PRODUCT

DESCRIPTION:
TEC WASHER GLUED PAIR 12MM

SIZE	PART NO.:	REV
A	TEC-M12ss	A

SCALE: 3:1 WEIGHT: SHEET 1 OF 1

5 4 3 2 1